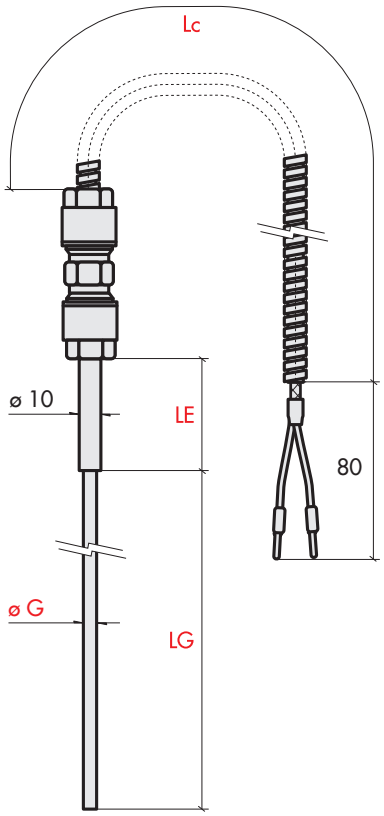

RINA approved sensors for naval purposes

Straight/reinforced Mgo thermocouple, ø 6 and ø 8 mm with extension wire

DATA SHEET

Mounting Fittings (see data sheet Z1 Accessories)

(for models without fixed attaching device only)

Bayonet assembly sizes

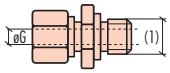

Material	Type of thread (1)	øG	Code
AISI 316	1/4"G	6	Z1 RFS-B/F060
	1/2"G	6	Z1 RFS-B/I060
	1/4"G	8	Z1 RFS-B/F080
	1/2"G	8	Z1 RFS-B/I080
Treated brass	1/4"G	6	Z1 RFS-O/F060
	1/2"G	6	Z1 RFS-O/I060
	1/4"G	8	Z1 RFS-O/F080
	1/2"G	8	Z1 RFS-O/I080

Thermowells from bar stock

Thermowell format	Description	Base code
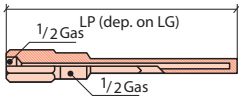	Straight / screw	Z5 EFI

Type of wire	Diam. øG mm	Base code
SS 0/SP - Inox 200°C max	6	**K1 Q60**
SS 0/SP - Inox 200°C max	8	**K1 Q80**

-

Thermocouple type	
K	NiCr - Ni DIN - IEC/800°C max

Element N° and limits	
0	Single Cl. 2 (standard)
2	Single Cl. 1 (special)

Hot junction	
0	Insulated
1	Grounded

-

Sheath material	
C	Inconel 600

Sheath LG mm
0150
0200
0250
0300
0350
0400
0450
0500
L min **0100**

-

Type of thread	
S	None

Extension LE mm	
05	50

-

Wire length Lc m	
05	0.5
10	1
15	1.5
20	2
25	2.5
30	3
35	3.5
40	4
45	4.5
50	5

Type of termination	
P	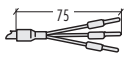 Terminals ø 1.4–1.8 max
S	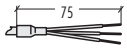 Insulated and tinned leads

Note: for LG, LE and Lc other lengths upon request. Code example: LG = 135mm cod. **0135** / LE = 60mm cod. **06** / Lc = 7m cod. **70**

Product code example: **K1 Q60 – K 0 0 – C 0250 – S 05 – 10 P**

Straight/reinforced Mgo thermocouple with SS °/SP wire, ø 6 mm sheath, NiCr-Ni DIN, class 2 single element, ungrounded element plain end, INCONEL 600 sheath, 250mm length, no attaching device, 50mm extended length, 1m wire and ø 1.8 mm ø terminals.