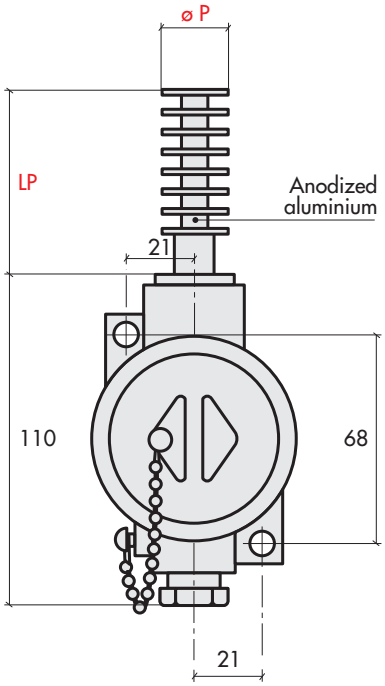

Sensors for aerothermical detection

Finned end fast response RTD, wall mounting connection case, IP67 protection

Electrical connections

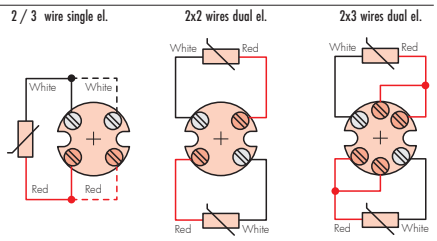

Connection case	Diam. øP mm	Base code
Painted aluminium IP67 case, optional Trasmitter * 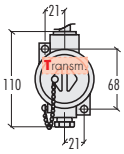	20	**EO P20**
	20 + T	**EO Q20**

Value in Ω at 0°C	Element N° and limits	Type of RTD
P Pt100 DIN - IEC	**0** 3-wire single Cl. B (1 DIN)	**1** Thin film 250 °C max
	1 3-wire single Cl. A (1/2 DIN)	
	2 3-wire single 1/3 DIN	
	6 6-wire dual Cl. B (1 DIN)	
	7 6-wire dual Cl. A (1/2 DIN)	

Tip material	Tip LP mm
Z Aluminium	**0060**
	Fixed

Note: * Transmitter for single element only.

Product code example: **EO P20 – P 0 1 – Z 0060**

Finned RTD, wall-mounting conn.case, 3-wire Pt100 single elem., class B (1 DIN), thin film element, ø 20mm anodized aluminium tip, 60mm length.